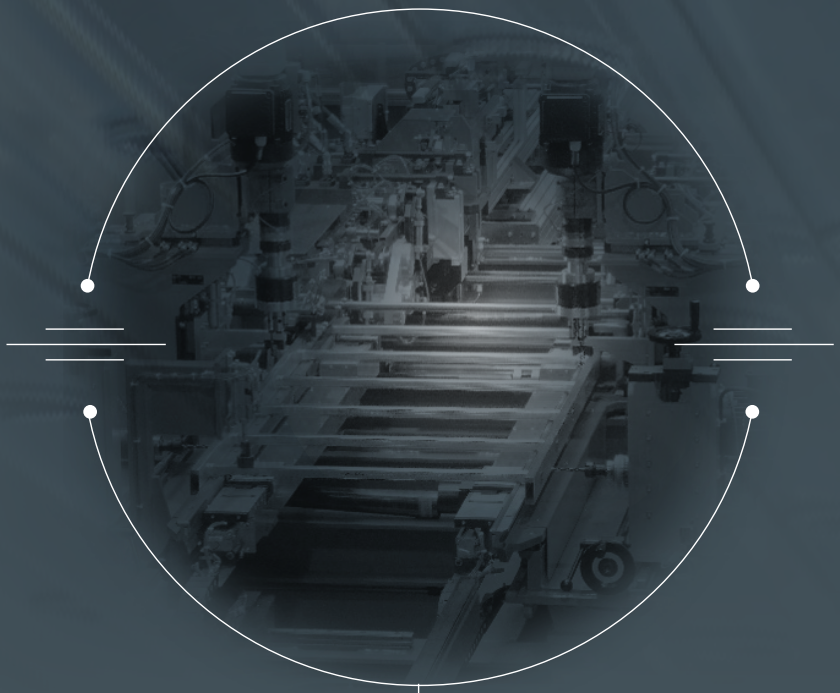

WORLD EXPERT IN ASSEMBLY

Automatic ladders and stepladders assembly machines

GUILLEMIN

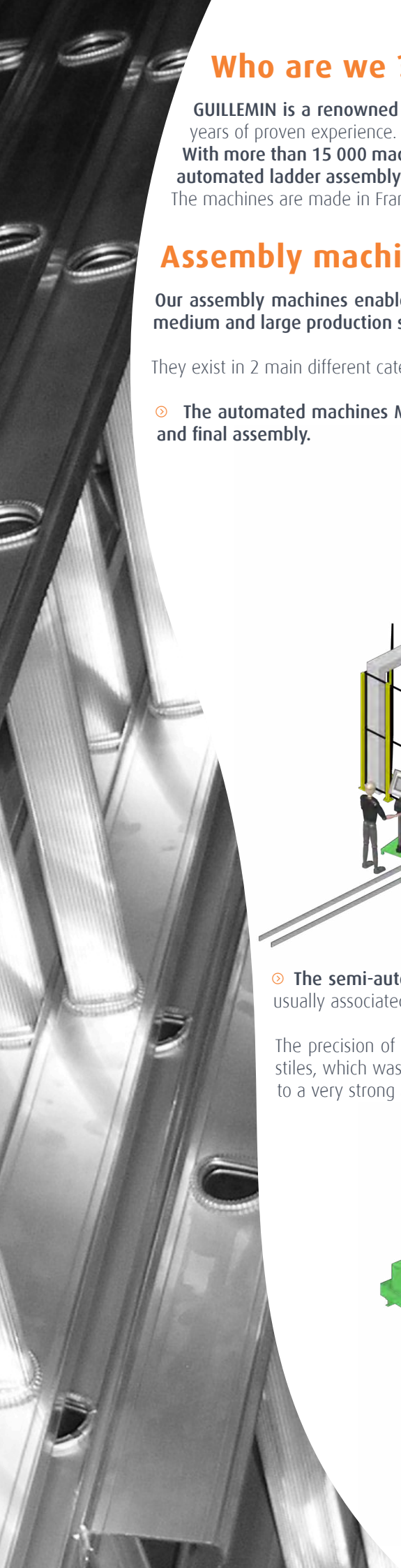

Who are we ?

GUILLEMIN is a renowned world specialist in assembly machines for aluminum ladders, with more than 50 years of proven experience.

With more than 15 000 machines installed all over the world, including some 150 semi-automated and fully-automated ladder assembly machines, GUILLEMIN has the widest range on the market.

The machines are made in France according to the current European safety and ergonomics standards (EC norms).

Assembly machines for parallel ladders in aluminum

Our assembly machines enable to produce parallel ladders in aluminum at high speed. They are intended for medium and large production series.

They exist in 2 main different categories of lay out :

- **The automated machines ME PEA 500/800 include the operations of stile punching, rung insertion in stiles and final assembly.**

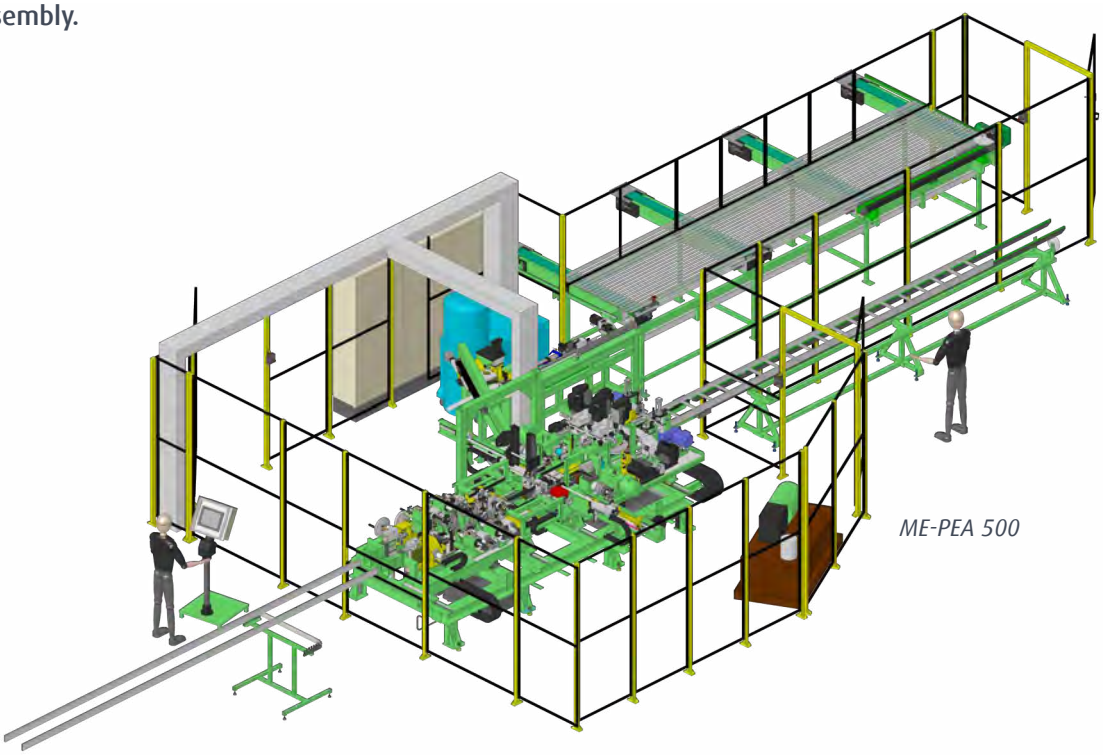

ME-PEA 500

- **The semi-automated machines MEA 800 perform the final assembly operations only.** They are usually associated with independent punching machines PEA 800, for the preparation of punched stiles.

The precision of the assembly process combining expansion and riveting (crimping) of the rung in the stiles, which was designed and developed by GUILLEMIN, enables to reach a high level of quality thanks to a very strong as well as aesthetic connection compliant with the current European EN and NF norms.

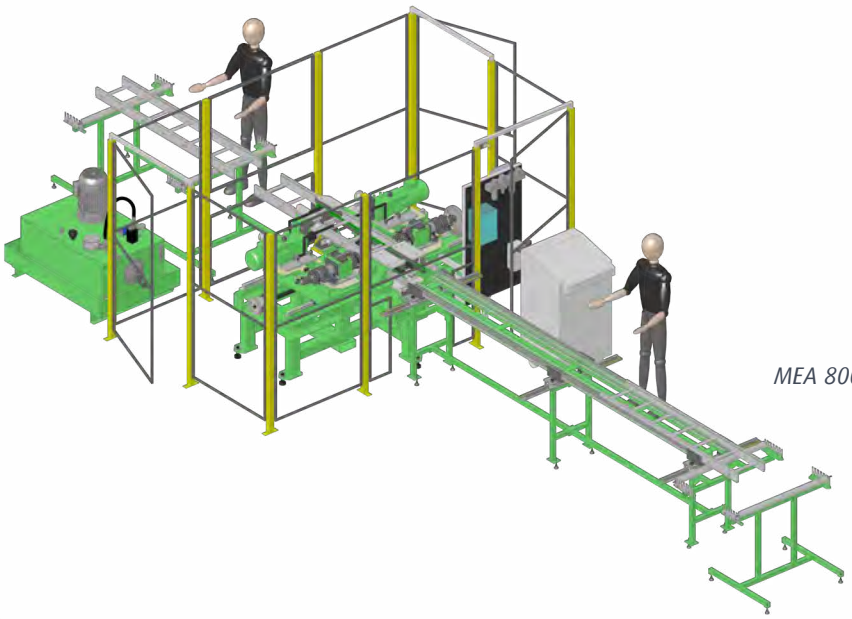

MEA 800

Step ladders Assembly Machines

Our step ladder assembly machines perform the manufacturing of aluminum step ladders.

They are based on a very efficient assembly technology with self-piercing rivets, developed by BOLLHOFF, which is also used in the assembly of aluminum plates in the automotive industry. This technique guarantees a very strong assembly, much stronger than the classic assembly with blind rivets.

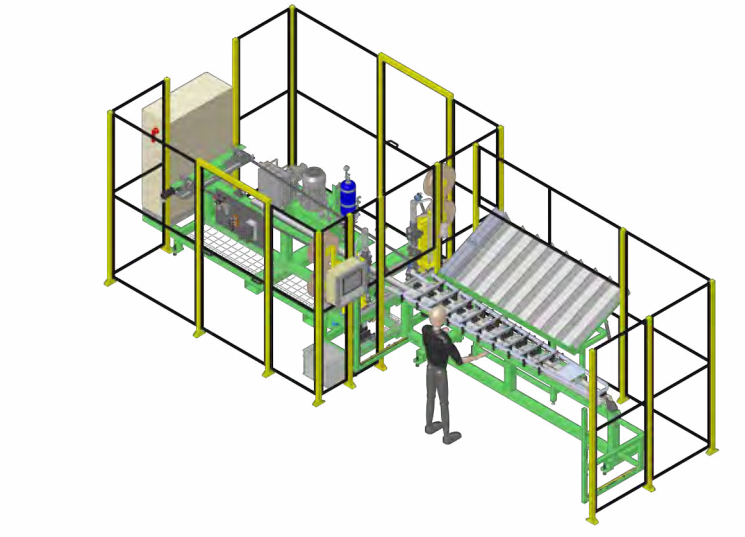

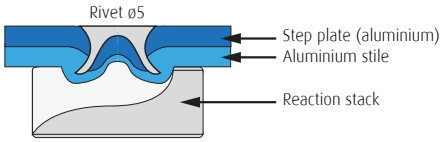

The steps and the stiles are loaded manually by the operator on a digitally-powered mobile jig.

Four BOLLHOFF riveting units with their coils or distributed in bowl feeders of rivets are mounted on digitalized carriers (X,Z). This allows the automatic assembly of the step-ladder.

Assembly machines for flared and conical ladders

The ladder assembly machines with mobile jigs allow to produce flared and conical aluminum ladders. The ladders are pre-assembled by one operator on a jig. Specific tools for pre-centering rungs and stiles are included. The jig is digitally monitored by servo-motor.

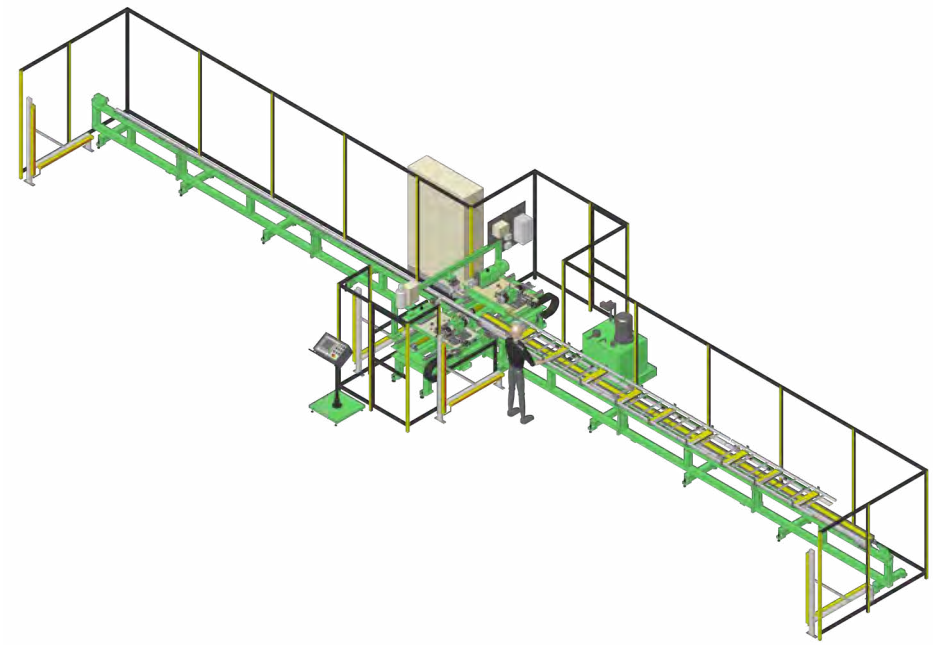

The final assembly of the ladder is done automatically.

Flexibility is the main advantage of this technology. The machine can be adapted to all dimensions of ladders thanks to its digital axes.

Punching machine

The punching machines perform the preparation of the ladder stiles. The range of machine includes several models which can be selected according to the required cadence and versatility.

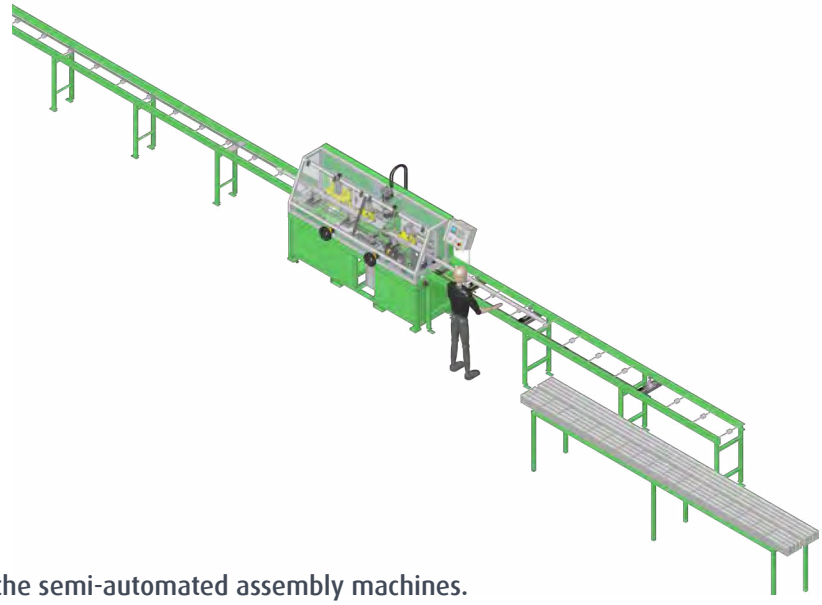

They are associated with the semi-automated assembly machines.

GUILLEMIN also offers individual punching workstations, dedicated to specific preparations to be made on the stiles.

The process

Punching

The stiles are punched with a very high precision on our machines. Thus, they enable the insertion of the rungs in automatic mode.

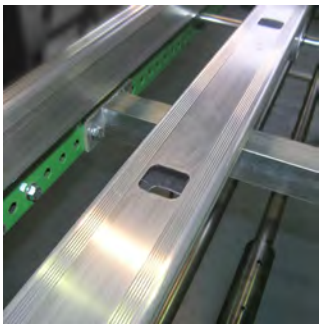

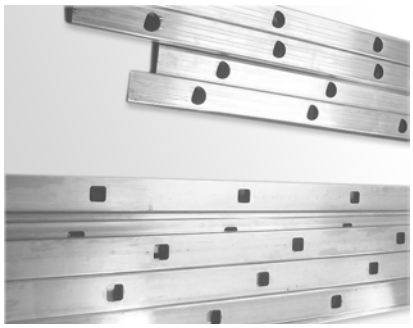

The expansion and riveting operations complete the process.

The punched hole is calibrated very precisely and provides for a very limited clearance with the rung (a few hundredths of millimeters only).
This methodology results in a strong stiffness of the assemblies and enables to obtain a very high level of quality.

Rung insertion

The rungs are inserted in the punched stiles automatically (for ME PEA machine), or manually (for MEA 800 machine).

Expansion

The expansion of the rungs in the stiles creates a bump on the external wall of the rung at the level of the internal section of the stile. This contributes to strenghthen the mechanical assembly of the two components.

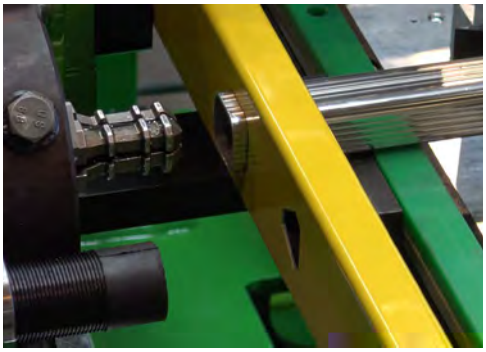

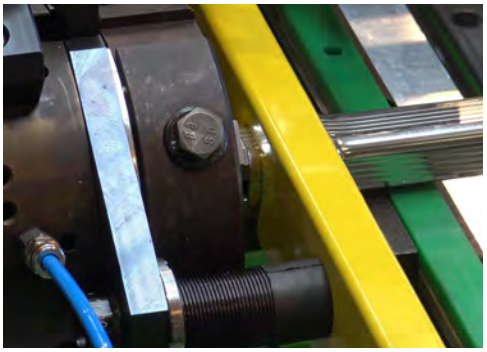

Riveting

After expansion, the assembly is performed by the riveting of the extremities of the rungs. The technology used (hydraulic riveting, or digital riveting) enables to control the speed of crimping in order to avoid damaging the aluminum.

Drilling

In option, the stiles can be drilled for the installation of accessories.

- Drilling on the small section of the profile, thanks to vertical drilling units.

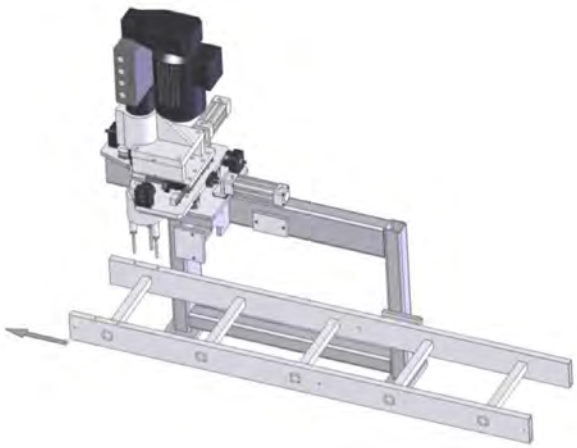

- Drilling on the wide section of the profile, thanks to horizontal drilling units.

LADDER MACHINE MEA 800

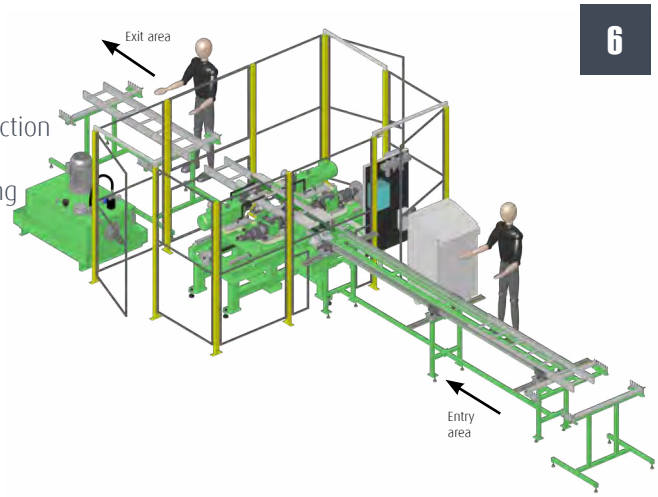

Equipment intended for ladder production in small, medium and large production series.
Rungs are put, by the operator, into stiles previously punched by the punching machine PEA 800. The pre-assembly ladder moves forward automatically to perform expansion and riveting of the rungs.

ADVANTAGES

- **Versatility : Multipitches - 250, 280, 300 mm**
- **High productivity**
- **Limited investment**
- **Rate : 60 ladders / hour** (ladder with 9 rungs, 400 mm width - 6 sec / rung)
- From 2 to 3 operators for the production
- Reliability of the machine
- Fast change of production : less than 20 min

LADDER CHARACTERISTICS

	dimensions in mm
Ladder width	280 to 800
Stile pitch (adjustable)	250 - 280 - 300 *
Ladder length	700 à ∞
Number of rungs (auto)	3 to 24
Horn length	see PEA characteristics
Regular section for stile	(50 x 20) to (120 x 30)
Stile thickness	max 1,75
Stile specific features	Closed rectangular with or without slides
Rung cross-section	(25 x 25) to (35 x 35)
Ring thickness	1,25 to 1,65
Rung position	centred or off-centred
Rung inclination	0°

* also available in 11'' and 12''

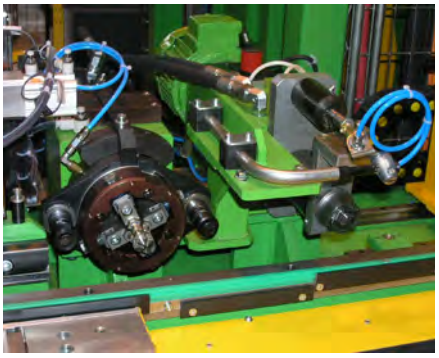

MACHINE FUNCTIONS

Manual

- Loading of punching stiles
- Pre-assembly of rungs into stiles by the operator
- Ladder width adjustment
- Assembled ladder unloading

Automatic

- Automatic ladder advance
- Expansion
- Riveting
- Automatic lubrication for expansion and riveting
- Assembled ladder exit

Standard automation PLC GUILLEMIN (5,7'' screen)

PUNCHING MACHINE PEA 800

Equipment intended to perform the punching at adjustable pitch on aluminium box sections profiles.
The machine prepares ladder stiles with rectangular, square or cicrular section which will be assembled later on the **MEA 800** assembly machine.

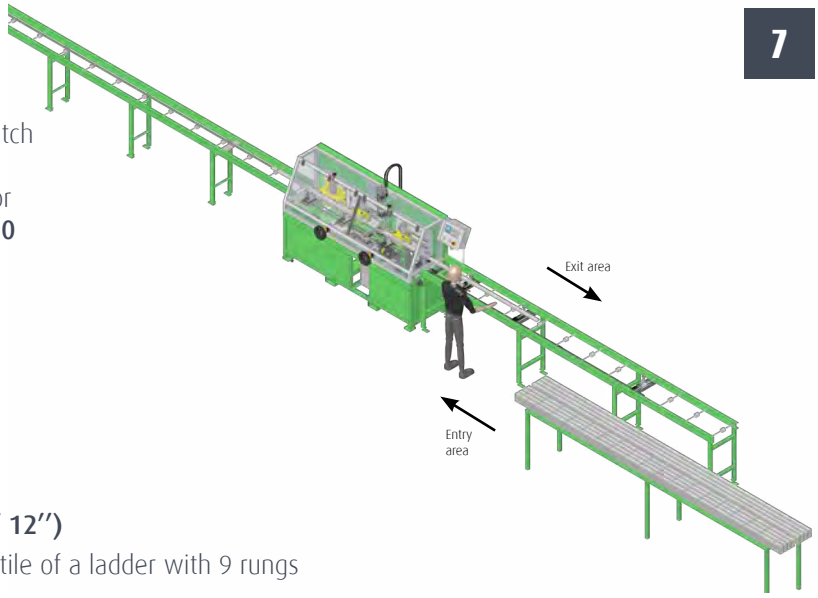

ADVANTAGES

- **Versatility : Multipitches - 250, 280, 300 mm (or 11'' / 12'')**
- Productivity : 90 stiles / hour that being 39,6 sec for one stile of a ladder with 9 rungs
  4,4 sec (from punching to punching)
- Only one operator for the production
- Reliability of the machine
- Fast change of production

CHARACTERISTICS OF STILE PROFILES

	dimensions in mm
Adjustable pitch	250 - 280 - 300
Stile length	min. 1500* and max. 6000
Rectangular section (mini)	50 x 20 (punched face)
Rectangular section (maxi)	120 x 30 (punched face)
Stile thickness	1,2 to 1,5
Horn length	50 to 230 (adjustable)
Rung position	centred or off-centred (adjustable)
Cycle time punch to punch	4,4 seconds
Cycle time for stiles of 9 punches	39,6 seconds

* Possibility of 700 mm (mini.) stile length with special extension (supplied). Installed by the operator for a given dimension of stile.

MACHINE FUNCTIONS

Manual

- Stiles loading and unloading
- Height and width adjustment

Automatic

- Stile avance
- Lubrication of punch
- Punching of stile
- Step by step stile advance
- Evacuation of punched stile

Standard automation PLC GUILLEMIN (5,7'' screen)

LADDER MACHINE ME PEA 500 / ME PEA 800

Automatic machine « all in one »

Equipment intended for the production of large series of production, at high speed, from aluminum stiles cut at length beforehand. Cut-at-length rungs are loaded by the operator and stored in the magazine of the machine. The stiles are loaded manually by the operator.

The machine performs in automatic mode the punching of stiles, the insertion of rungs and the final assembly (expansion – riveting). At the exit of the machine, the ladder is fully assembled (except potential mounting of accessories).

ADVANTAGES

- **High productivity**
- **Continuous flow : 65 ladders / hour (ladder with 9 rungs, 400 mm width, 5 sec / rung)**
- Magazine capacity : 20 rungs (24x24) - 90 rungs (24x24) with extension magazine in option (ME PEA 800)
- Reliability of the machine
- Fast change of production : less than 20 min
- 2 operators to perform the production

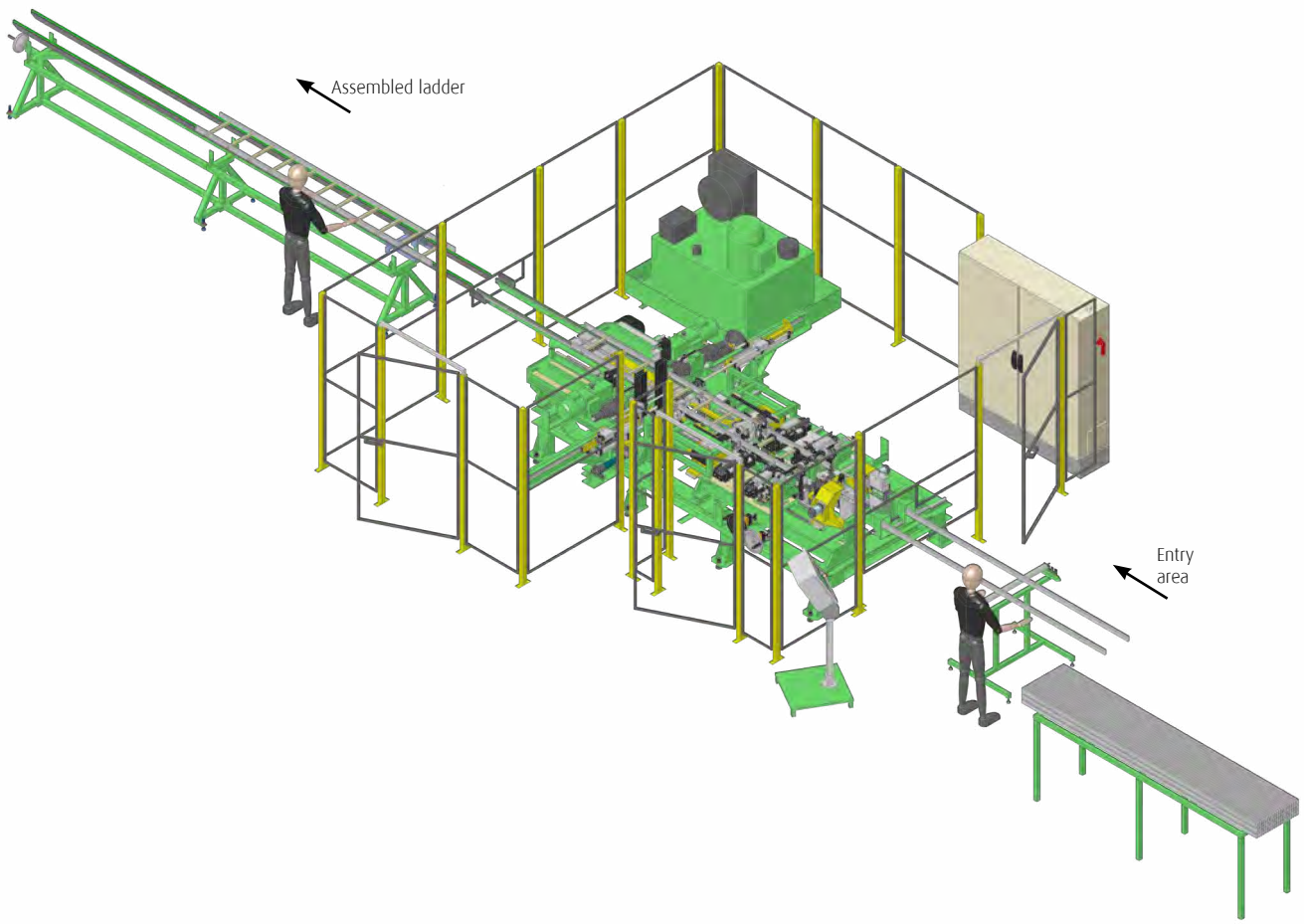

LADDER CHARACTERISTICS

dimensions in mm	ME PEA 500	ME PEA 800
Ladder width (internal)	280 to 500	280 to 800
Stile pitch (fixed)	250 or 280 or 300 *	
Ladder length	1480 to ∞	
Number of rungs (auto)	5 to 24	
Number of rungs (manu)	5 to ∞	
Horn length	30 to 260	
Stile regular section (rung centered in stile)	(45 x 20) to (130 ** x 25)	
Stile thickness	max 1,75	
Stile specific features	Closed rectangular with or without slides	
Rung cross-section	(25 x 25) to (35 x 35)	
Rung thickness	1,25 to 1,65	
Rung position	centred or off-centred	
Rung inclination	0° or 20° *	

** defined at order*
*** 114 mm with an off-centred rung*

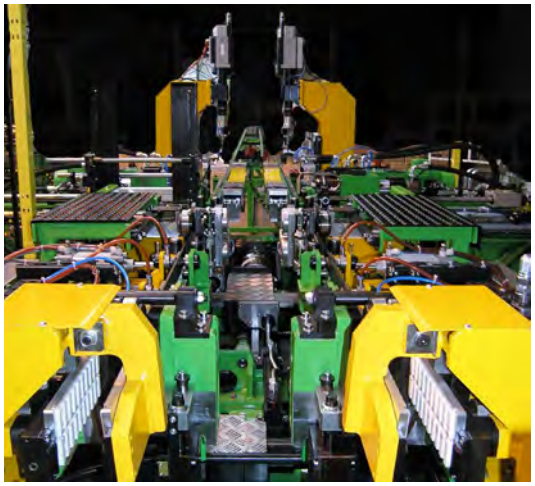

MACHINE FUNCTIONS

Manual

- Stiles loading
- Loading of rungs cut-at-length in insertion magazine (capacity of 20 rungs)
- Ladder unloading

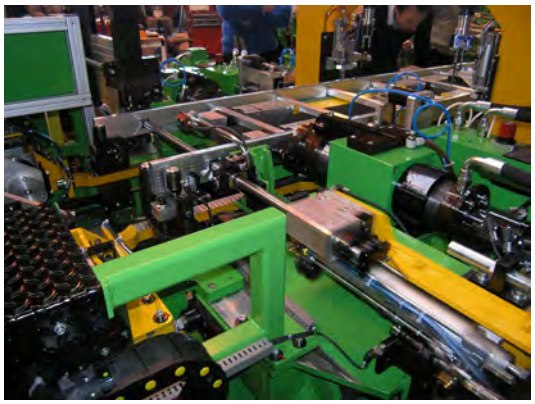

Automatic

- Ladder width adjustment : Digitalized (servomotor)
- Automatic advance of the ladder
- Punching of stiles
- Insertion of rungs
- Expansion
- Riveting
- Automatic lubrication for punching, expansion and riveting
- Exit of the ladder

Automation PLC : SCHNEIDER PacDrive new generation + HMI 10 ''

Options

- Drilling (vertical or horizontal) of stiles for accessories
- Milling on external side of the stile
- Electrical adjustment of stile height (digitalized by servomotor)
- Electrical adjustment of limit stile switches (digitalized by servomotor)
- Extension of magazine for 90 rungs (conveyor)

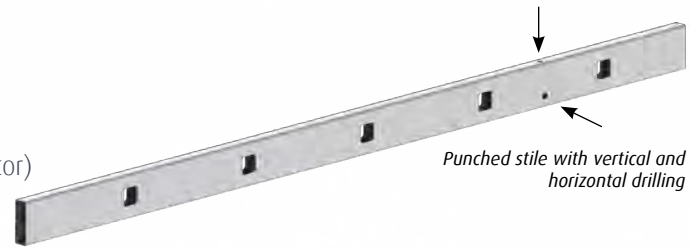

Punched stile with vertical and horizontal drilling

LADDER MACHINE ME CPEA 500 / ME CPEA 800

Automatic machine « all in one »

Equipment intended for the production of large series of production, at high speed, from aluminum stiles cut at length beforehand. Six meters long rung profiles are loaded by the operator and stored in the magazine. The stiles are loaded manually by the operator.

The machine performs in automatic mode the sawing of rungs, the punching of stiles, the insertion of rungs and the final assembly (expansion – riveting). At the exit of the machine, the ladder is fully assembled (except potential mounting of accessories).

ADVANTAGES

- **High productivity**
- **Continuous flow : 65 ladders / hour (ladder with 9 rungs, 400 mm width, 5 sec / rung)**
- **Large autonomy (1h) of rungs section magazine (length of 6m)**
- Reliability of the machine
- Fast change of production : less than 20 min
- 2 operators to perform the production

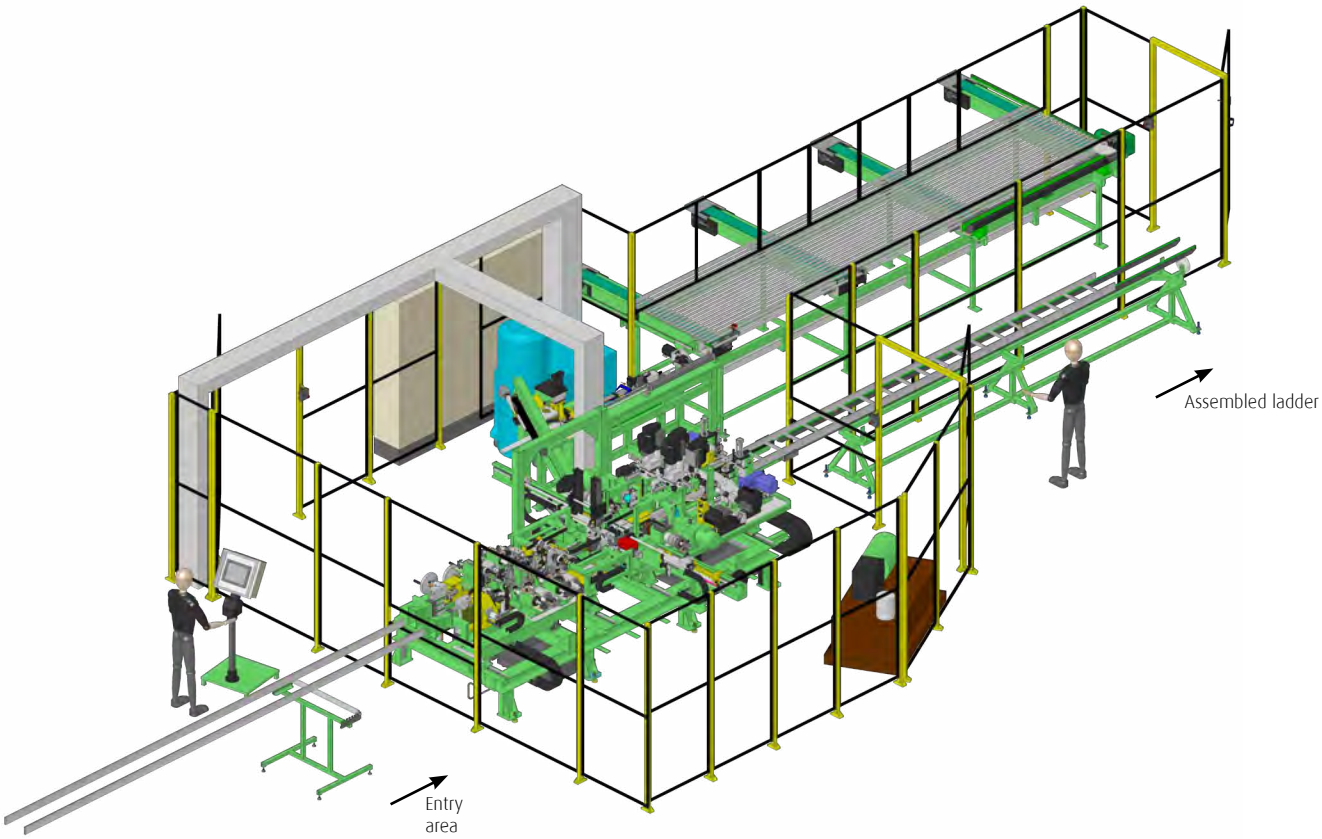

LADDER CHARACTERISTICS

dimensions in mm	ME CPEA 500	ME CPEA 800
Ladder width (internal)	280 to 500	280 to 800
Stile pitch (fixed)	250 or 280 or 300 *	
Ladder length	1480 to ∞	
Number of rungs (auto)	5 to 24	
Number of rungs (manu)	5 to ∞	
Horn length	30 to 260	
Stile regular section (rung centered in stile)	(45 x 20) to (130 ** x 25)	
Stile thickness	max 1,75	
Stile specific features	Closed rectangular with or without slides	
Rung cross-section	(25 x 25) to (35 x 35)	
Rung thickness	1,25 to 1,65	
Rung position	centred or off-centred	
Rung inclination	0° or 20° *	

** defined at order*
*** 114 mm with an off-centred rung*

Horizontal and vertical drilling units

MACHINE FUNCTIONS

Manual

- Stiles loading
- Supply of rung profiles (length 6m)
- Ladder unloading

Automatic

- Rungs :
  Feeding of profiles and cutting at length (6m) of rungs by sawing machine
- Ladder width adjustment : Digitalized (servomotor)
- Rung cut length adjustment : Digitalized (servomotor)
- Automatic ladder advance
- Stile punching
- Rungs insertion
- Expansion
- Riveting

Automation PLC : SCHNEIDER PacDrive new generation + HMI 10 ''

Rungs magazine

Options

- Drilling (vertical or horizontal) of stiles for accessories
- Milling on external side of the stile
- Electrical adjustment of stile height (digitalized by servomotor)
- Electrical adjustment of limit stile stoppers (digitalized by servomotor)

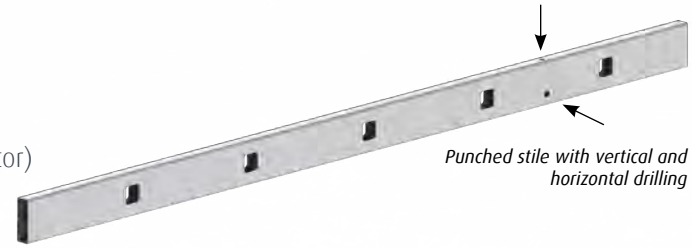

Punched stile with vertical and horizontal drilling

LADDER MACHINE ME RCPEA 800

Automatic machine « all in one »

Equipment intended for the production of very large series of production, at high speed, from aluminum stiles cut at length beforehand.

This equipment includes all the preparation for accessories on the stiles (specific punching, milling,...) for the further mounting of hinges and guiding rollers.

Six meters long rung profiles are loaded by the operator and stored in the magazine. The stiles are stored in the stile profiles magazine. They are loaded by a FANUC robot.

The machine performs in automatic mode the sawing of rungs, the punching of stiles, the insertion of rungs and the final assembly (expansion – riveting). At the exit of the machine, the ladder is fully assembled (except potential mounting of accessories).

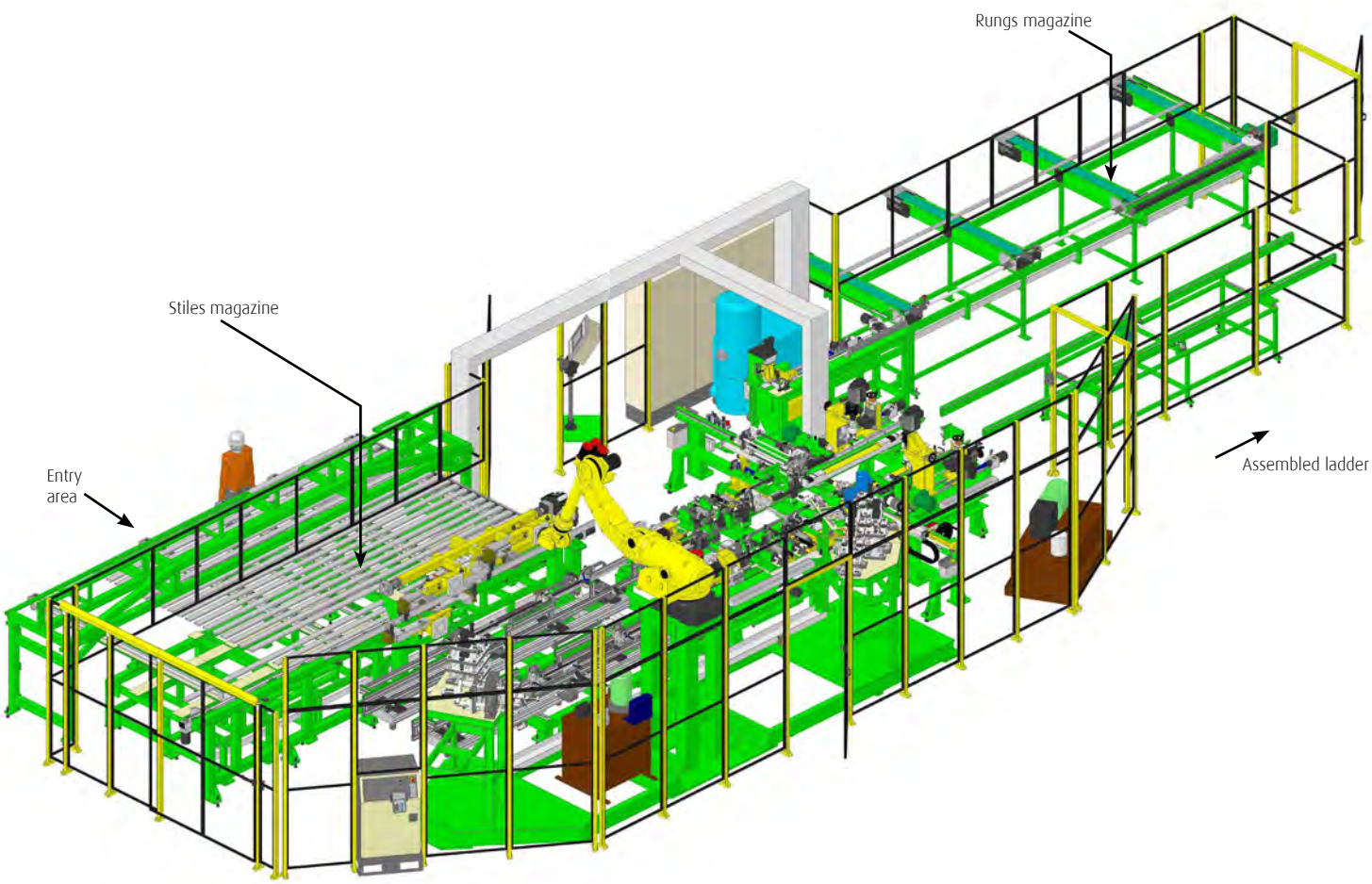

ADVANTAGES

- **High productivity**
- **Robot 6 axes for the manipulation of stiles and for specific preparations**
- **Continuous flow : 65 ladders / hour (ladders with 9 rungs, width 400 mm, 5 sec / rung)**
- **Large autonomy (1 hour) of the 6m long rung profile magazine (50 to 60 profiles)**
- **Autonomy of stile profile magazine : 22 profiles**
- 2 operators to perform the production
- Reliability of the machine
- Fast change of production : less than 20 min

LADDER CHARACTERISTICS

dimensions in mm	ME RCPEA 500	ME RCPEA 800
Ladder width (internal)	280 to 500	280 to 500
Stile pitch (fixed)	250 or 280 or 300 *	
Ladder length	1480 to ∞	
Number of rungs (auto)	5 to 24	
Number of rungs (manu)	5 to ∞	
Horn length	30 to 260	
Stile regular section (rung centered in stile)	(45 x 20) to (130 ** x 25)	
Stile thickness	max 1,75	
Stile specific features	Closed rectangular with or without slides	
Rung cross-section	(25 x 25) to (35 x 35)	
Rung thickness	1,25 to 1,65	
Rung position	centred or off-centred	
Rung inclination	0° or 20° *	

** defined at order*
*** 114 mm with an off-centred rung*

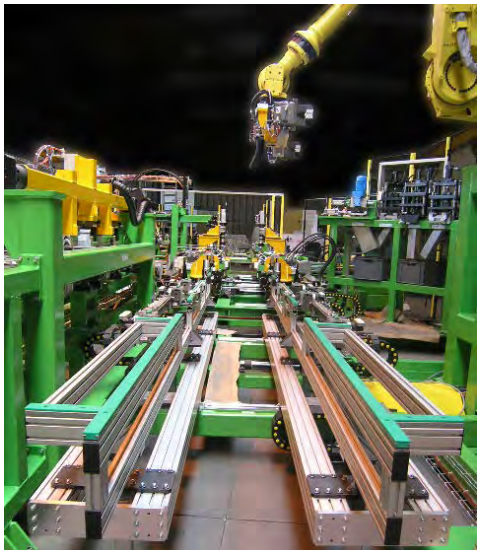

MACHINE FUNCTIONS

Manual

- Supply of the stock of rung profiles
- Supply of the stock of stile profiles
- Unloading of finished ladder

Options

- Drilling (vertical or horizontal) of stiles for accessories
- Milling on external side of the stile
- Electrical adjustment of stile height (digitalized by servomotor)
- Electrical adjustment of limit stile stoppers (digitalized by servomotor)

Automatic

- Stiles : storage magazine and preparation
- Rungs :
  6 meters long rung profiles magazine
  Automatic loading and cutting at length of rungs by sawing machine
- Adjustment of ladder width : digital (servomotor)
- Adjustment of cutting at length of rung : digital (servomotor)
- Automatic advance of ladder
- Punching of stiles
- Insertion of rungs
- Expansion
- Riveting

Automation PLC : SCHNEIDER PacDrive new generation + HMI 10 ''

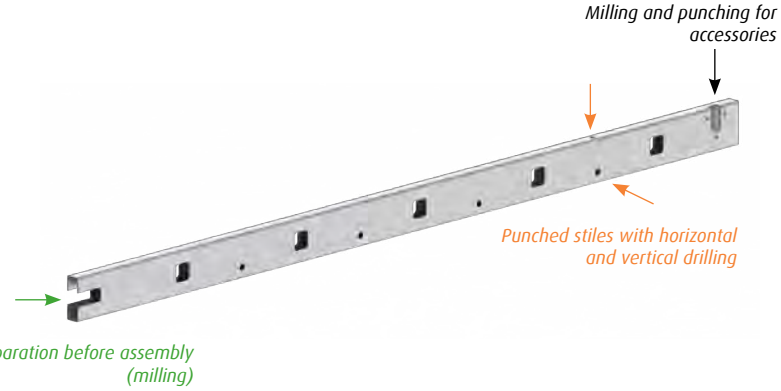

OTHER PUNCHING MACHINES

Double punching machine PEA 800²

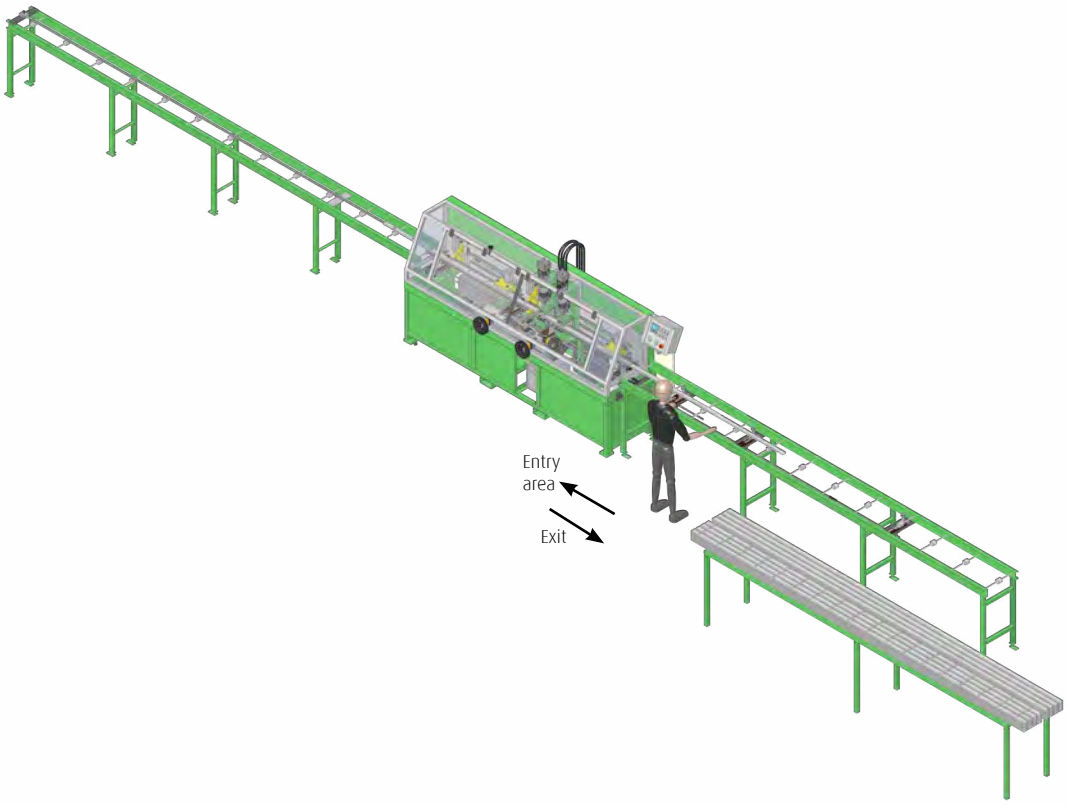

Equipment made of two punching units and intended for the punching of holes with fixed pitch, on box section aluminum profiles. The machine prepares the ladder stiles with rectangular, square or round sections, which will then be assembled on the ladder machine MEA 800.

- **High productivity : 180 stiles/hour, that is : 22,2 seconds for a ladder stile of 9 rungs**
  2,2 seconds (from one punching to the next)
- **One operator only, to make the production**
- **Reliability of the machine**
- **Fast changeover of production**

Standard GUILLEMIN controller (5,7'' screen)

	dimensions in mm
Pitch (fixed)	250 or 280 or 300 *
Stile length	min. 1500** and max. 6000
Rectangular section (mini)	20 x 50 (punched face)
Rectangular section (maxi)	60 x 120 (punched face)
Stile thickness	1,2 to 1,5
Horn length	50 to 230 (adjustable)
Rung position	centred or off-centred (adjustable)
Cycle time punch to punch	2,2 seconds
Cycle time for stiles of 9 punches	22 seconds

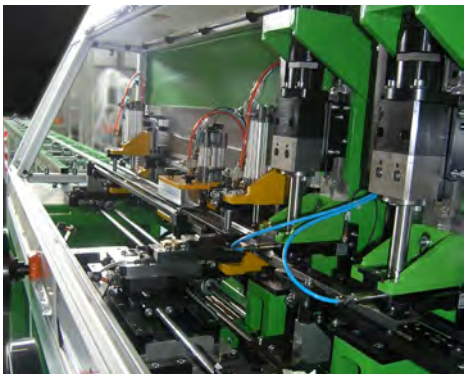

Additional information on request.

** Fixed pitch (standard), defined at order*
*** Possibility of 700 mm (mini.) stile length with special extension (supplied). Installed by the operator for a given dimension of stile.*

OTHER PUNCHING MACHINES

Double punching machine PEA SPEED

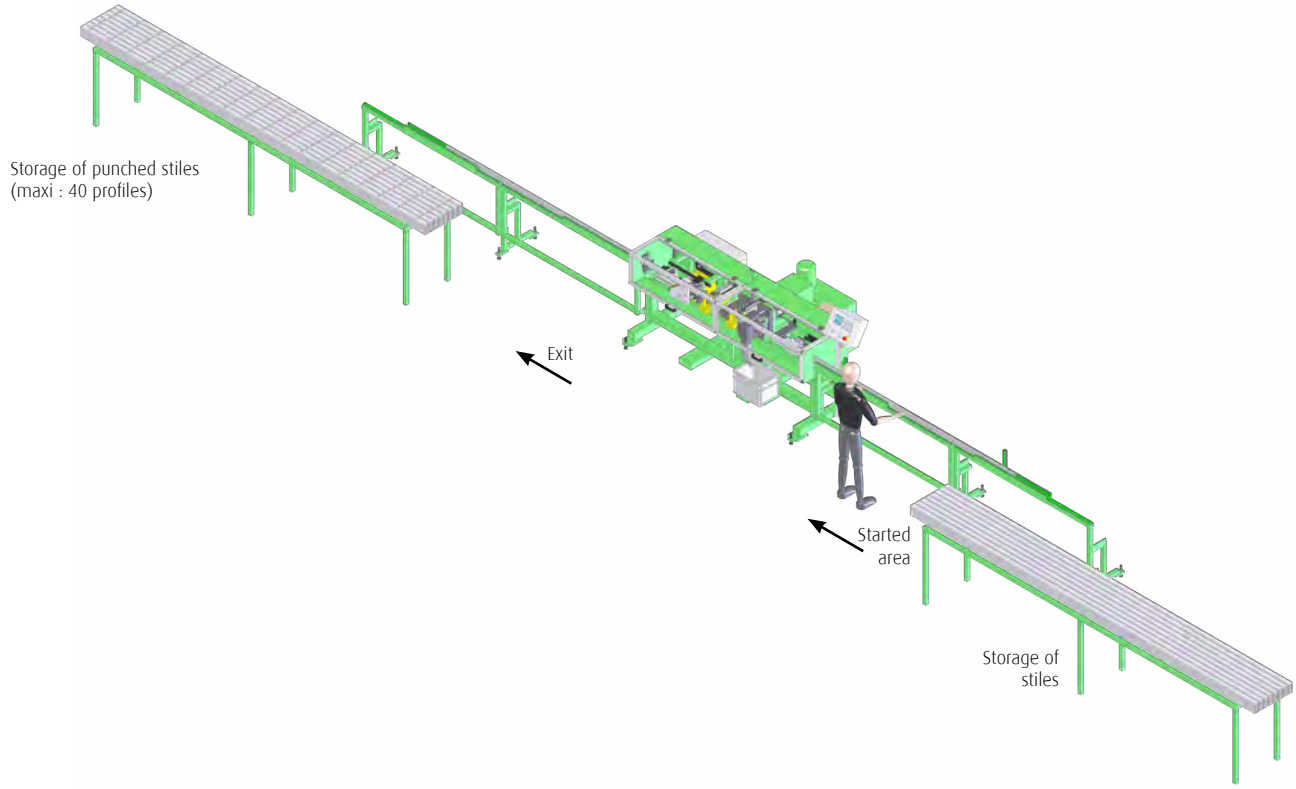

Equipment intended for the punching of holes with fixed pitch, on box section aluminum profiles, for high series of production.
In association with a MEA 800 ladder assembly machine, this punching machine prepares the ladder stiles with rectangular, square or round sections, with the same cadence.

- **Productivity : 3 seconds (from one punching to the next)**
  130 stiles/hour for a ladder stile of 9 rungs
- **One operator only, to make the production**
- **Reliability of the machine**
- **Fast changeover of production**
- **Versatility : interchangeable pitches 250/280/300 mm in standard version**

Standard GUILLEMIN controller (5,7'' screen)

	dimensions in mm
Adjustable pitch	250 or 280 or 300
Stile length	min. 1000 and max. 6000
Rectangular section (mini)	20 x 50 (punched face)
Rectangular section (maxi)	20 x 120 (punched face)
Stile thickness	1,2 to 1,5
Horn length	70 with a pitch of -35 mm (adjustable)
Rung position / lower edge of stile	centred or off-centred (adjustable) 23 mm < distance < 60 mm
Cycle time punch to punch	3 seconds for a pitch of 250 mm
Cycle time for stiles of 9 punches	27 seconds

Additional information on request.

PREPARATION WORKSTATION

Workstation of milling of stiles

Equipment intended for the performing of predetermined milling operations on aluminum profiles with box sections. The milling enables the preparation, before assembly, of the ladder stiles with rectangular sections.

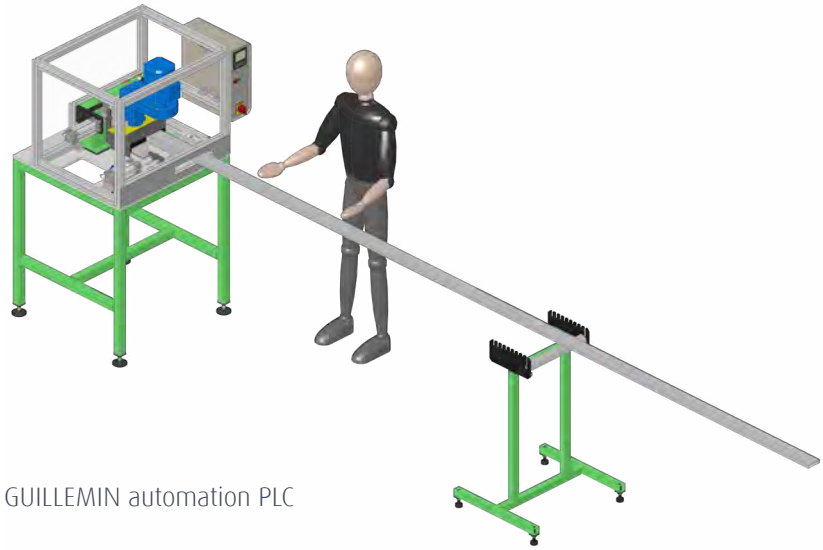

- Autonomous machine with GUILLEMIN automation PLC
- One milling unit SOMEX
- Productivity : 1 milling in 6 seconds
- One operator only, to make the production
- Reliability of the machine

Standard automation PLC GUILLEMIN (5,7'' screen)

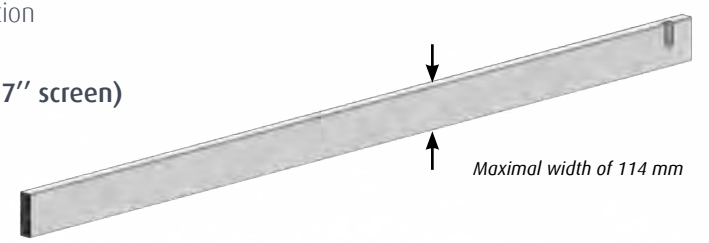

Preparation workstation for double punching of stiles

Equipment intended for the punching of box sections aluminum profiles with fixed pitch.

This workstation enables the preparation, before assembly, of the ladder stiles with rectangular sections. The punching can be done on stiles loaded either on their small section (vertically) or their large section (horizontally). These preparations will enable the later fixation of accessories.

- Autonomous machine with GUILLEMIN automation PLC
- Productivity : 1 punching in 4 seconds
- Interchangeable tools
- One operator only, to make the production
- Machine available in separated workstations
- Reliability of the machine

Standard automation PLC GUILLEMIN (5,7'' screen)

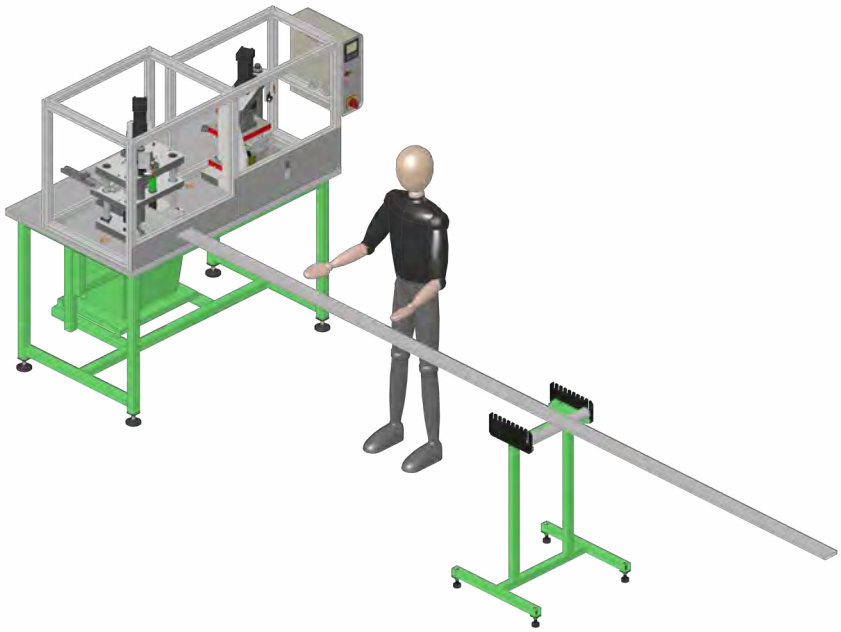

Punching on large sections

For the punching on the large section of stiles, the punches made are identical on both the inner and the outer walls of the stile.

In the plane of symmetry

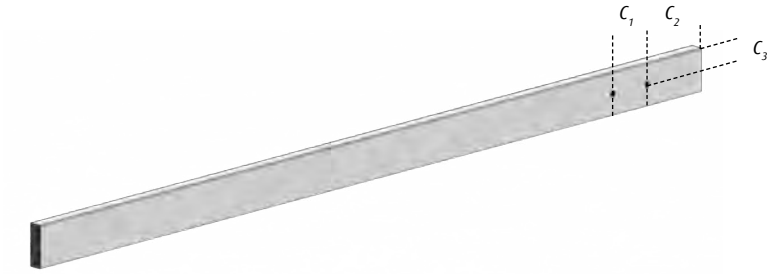

Example of punching on large section
In the plane of symmetry

C_1, C_2 et C_3 defined during the order

Diagonal

Example of punching on large
section in diagonal

C_4, C_5, C_6 et C_7 defined during the order

Punching on small sections

For the punching on the small section of stiles, the diameters of the punches made can be different on the inner and the outer walls of the stile.

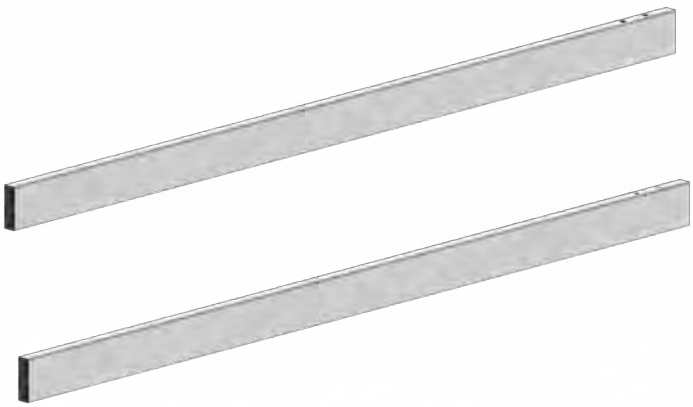

Punching on small sections with different diameters

Example of punching on small section

LADDER ASSEMBLY MACHINES FOR RUNGS WITH BUBBLING

Preparation workstation for the «bubbling» of D rungs

The operator manually inserts the rung in the machine. The machine performs a huge expansion, called «bubbling». The rungs are then ready to be inserted in «C» stile profiles.

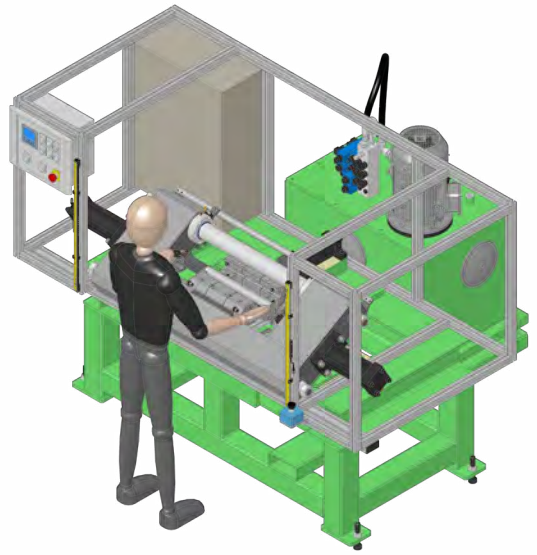

Example of «bubbling» on a rung

Rung section

Punching of open sections stiles type «C»

The operator manually introduces the profiles in the machine. The machine performs the punching on the two stiles (left and right) simultaneously.

The "C" open section profiles and the D rungs are assembled in a separate assembly machine.

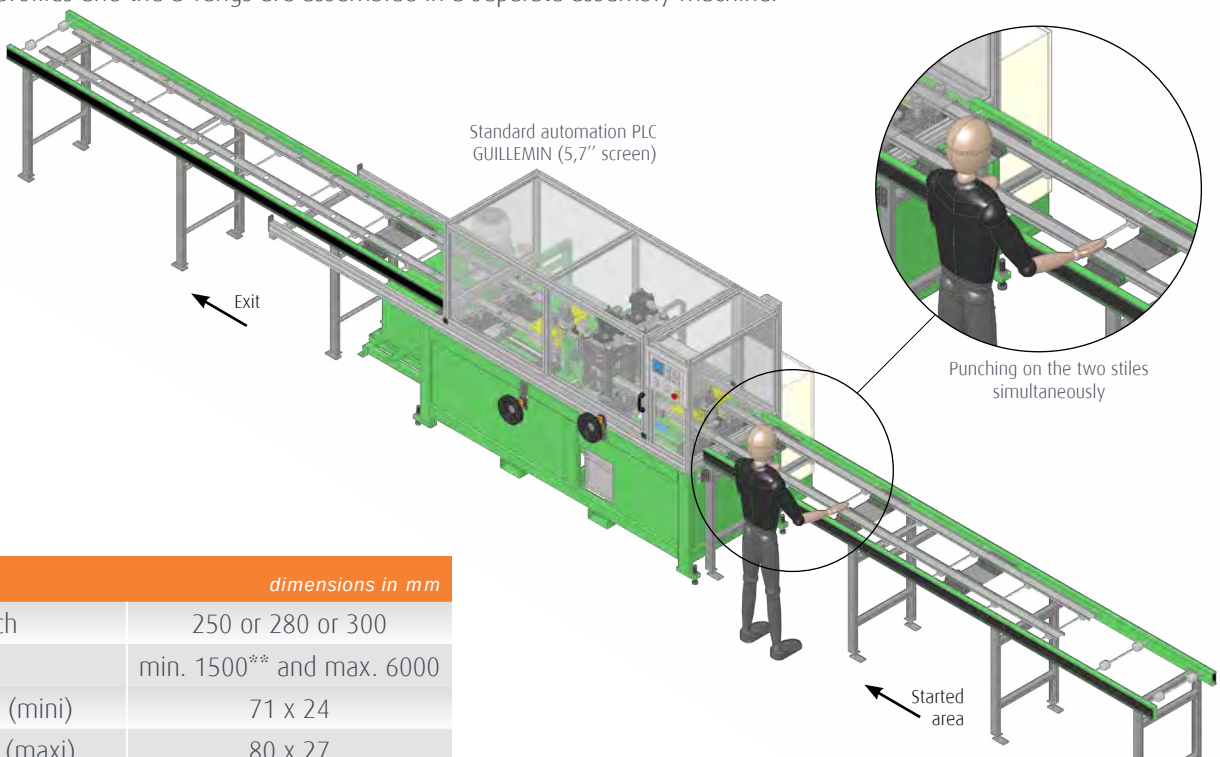

	dimensions in mm
Adjustable pitch	250 or 280 or 300
Stile length	min. 1500** and max. 6000
Rectangular section (mini)	71 x 24
Rectangular section (maxi)	80 x 27
Stile thickness	1,8
Horn length	Adjustable
Rung position	Centred
Cycle time punch to punch	4 seconds
Cycle time for stiles of 9 punches	36 seconds

Stile section

* *Fixed pitch, to define at order.*
** *Possibility of 700 mm (mini.) stile length with special extension (supplied). Installed by the operator for a given dimension of stile.*

Assembly machine MEA-O

The operator manually introduces the open section profiles, pre-assembled with the D rungs, in the machine.
Assembly is made automatically thanks to two lateral riveting units.
The assembled ladder is evacuated automatically.

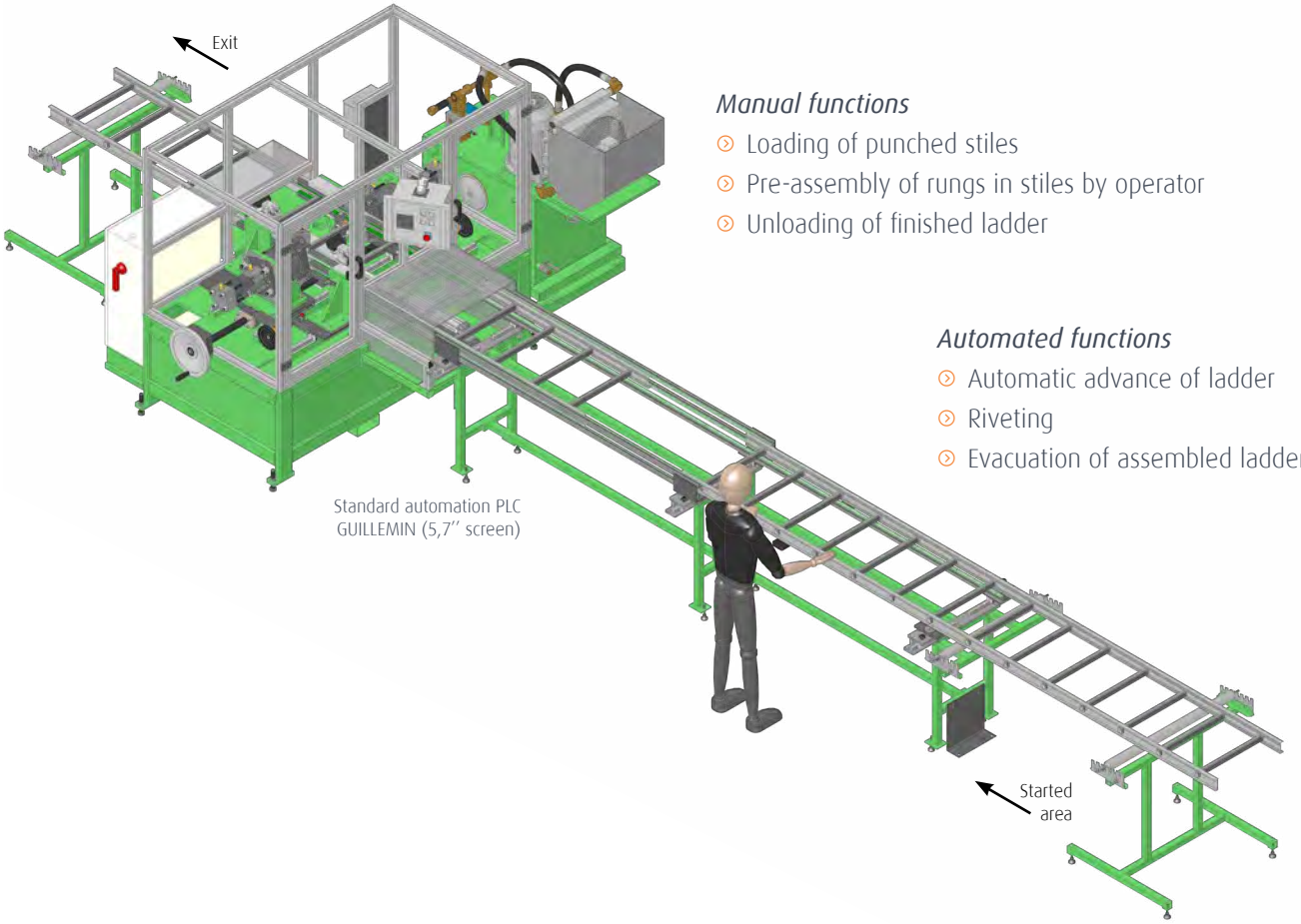

Manual functions

- Loading of punched stiles
- Pre-assembly of rungs in stiles by operator
- Unloading of finished ladder

Automated functions

- Automatic advance of ladder
- Riveting
- Evacuation of assembled ladder

	dimensions in mm
Ladder width (internal)	280 to 500
Stile pitch (fixed)	250 or 280 or 300 *
Ladder length	1480 to ∞
Number of rungs (auto)	5 to 14
Horn length	152,4
Stile regular section	(71 x 24) to (80 x 27)
Stile thickness	max 1,8
Rung cross-section	(40,1 x 32,5) to (41,5 x 32,6)
Rung thickness	1,3 to 1,6
Rung position	Centred
Rung inclination	14,5° *

** defined at order*

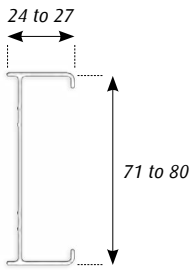

Regular stile section

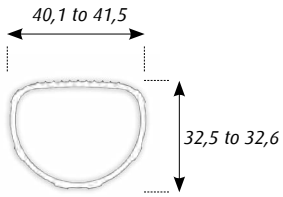

Rung section

MACHINES FOR THE MANUFACTURING OF STEP LADDER

Preparation machine for the bending of front stiles of step ladder

It performs the bending (with bending unit), drilling and punching of stiles.

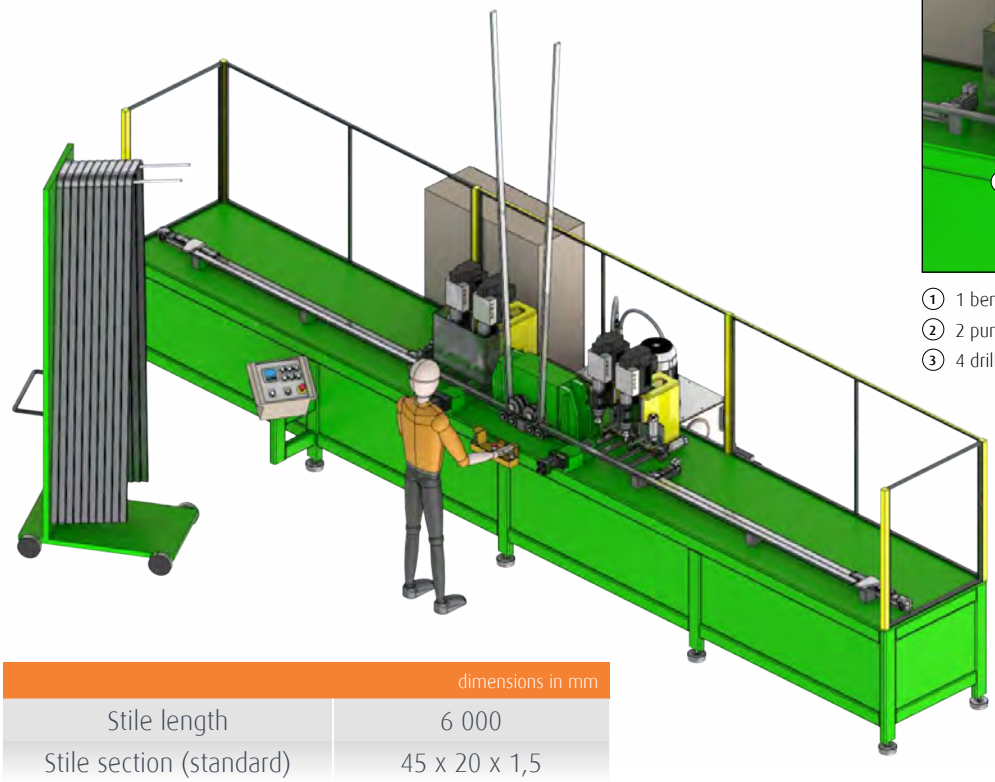

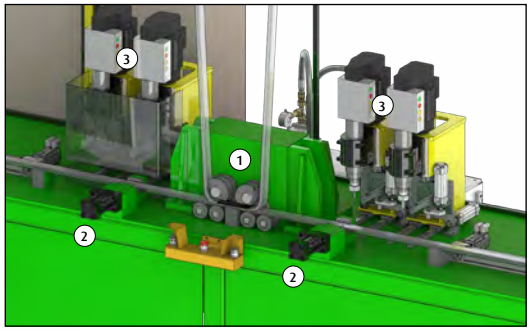

① 1 bending unit
② 2 punching units
③ 4 drilling units

	dimensions in mm
Stile length	6 000
Stile section (standard)	45 x 20 x 1,5
Angle	To be defined
Option : automatic centering of the stile	

Preparation machine for the bending of rear stiles of step ladders

It performs the bending and the drilling of stiles.

① 3 drilling units
② 1 bending unit
③ Deburring and flattening

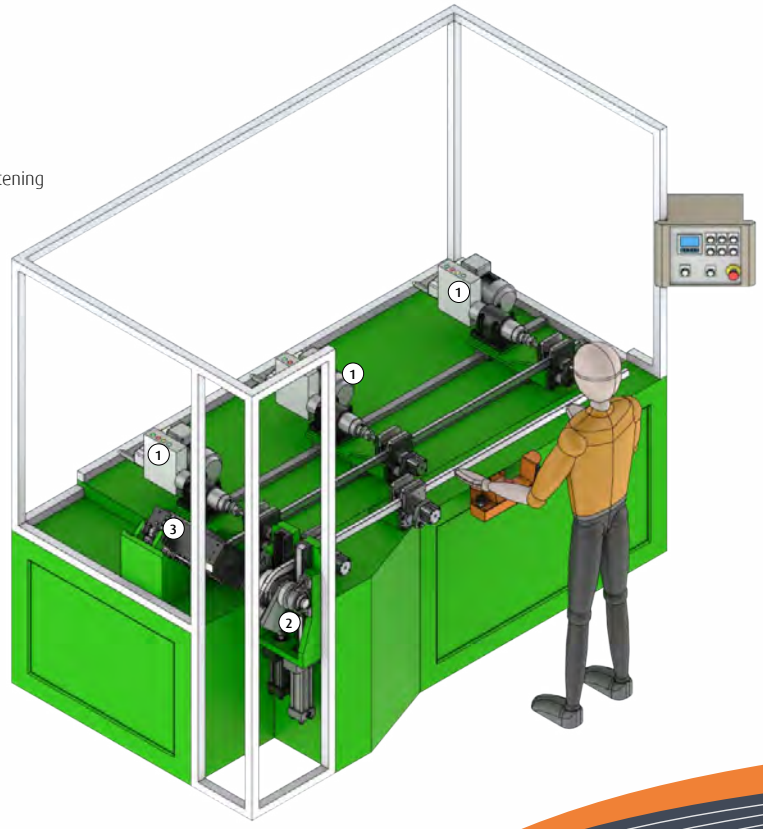

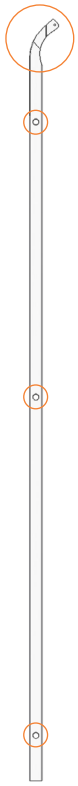

All of the operations performed on stiles

Semi-automatic assembly machine of the rear part of step ladders

This assembly is made by automatic riveting. The operator manually moves the step ladder after each riveting, to the next.

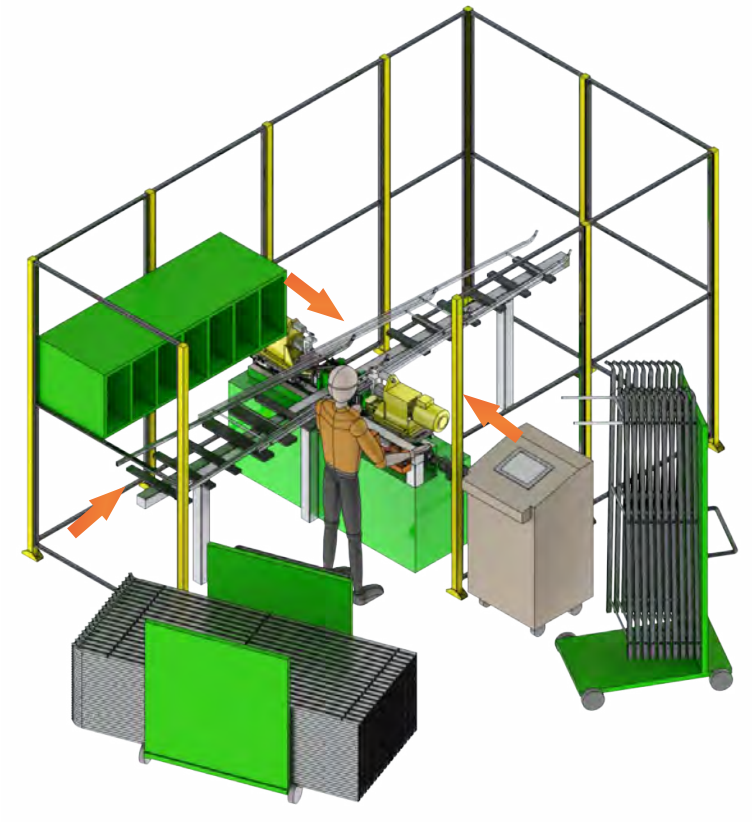

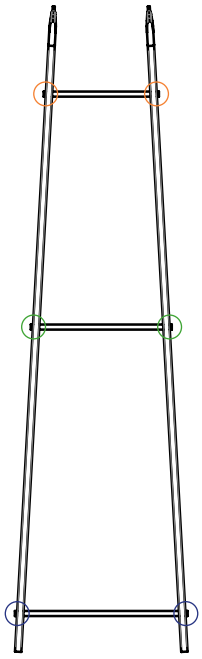

All of the operations performed on stiles with manual advance

Automatic assembly machine of the rear part of step ladders

This assembly is made by automatic riveting. The step ladder is mounted on a jig which automatically moves to the next step after each riveting.

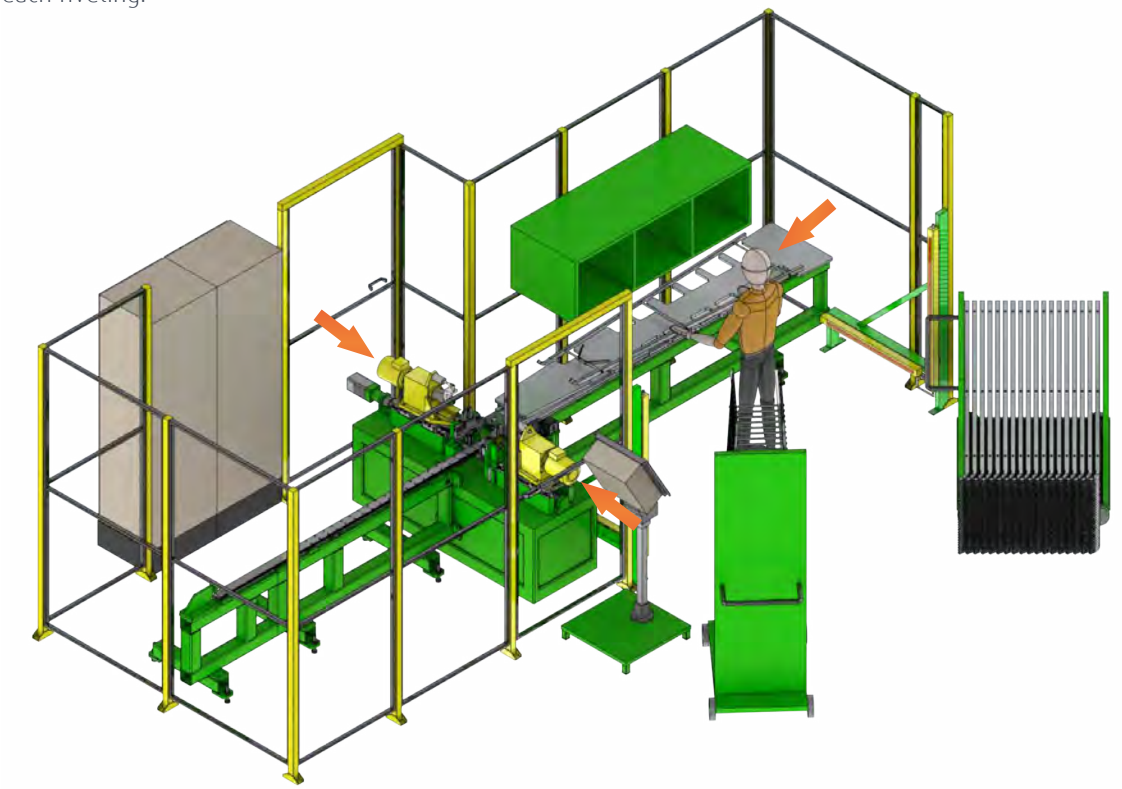

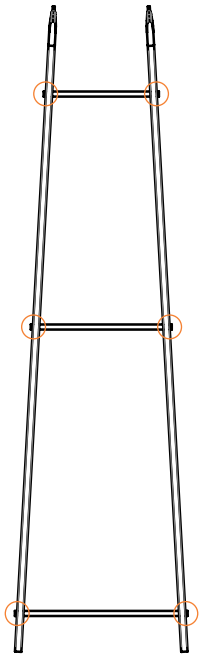

All of the operations performed on stiles automatically

STEP LADDER MACHINE

Equipment intended for small, medium and mass aluminium step ladder assembly series.

The operator makes the pre-assembly of steps and stiles of the step ladder, which is automatically introduced in the machine. The step by step riveting is made by 4 BOLLHOFF units drived by servo-motors.

When all the operations are performed, the step ladder leaves the machine assembled.

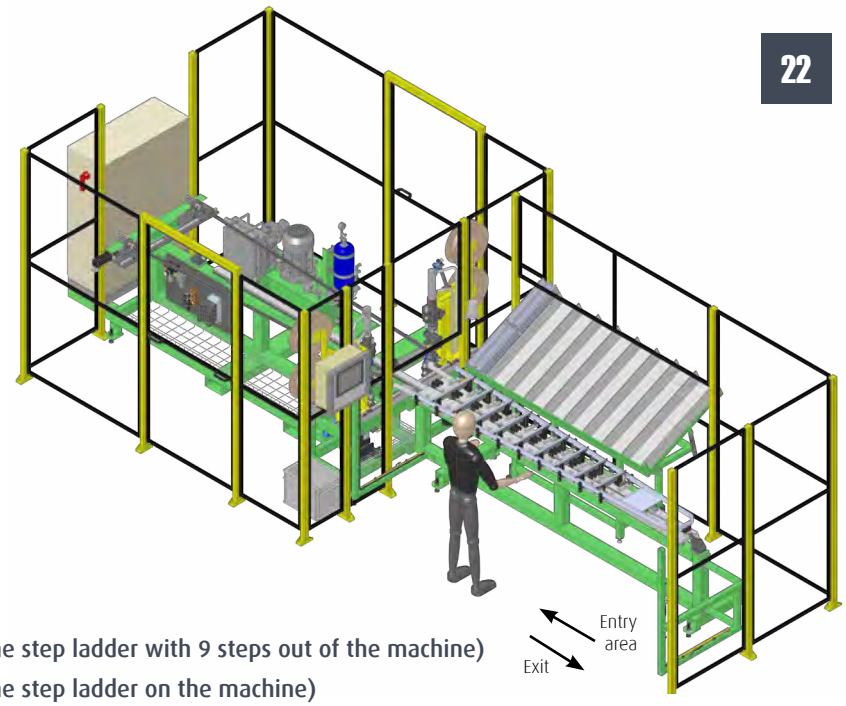

ADVANTAGES

- **Productivity : 50 step ladders / hour (preparation of the step ladder with 9 steps out of the machine)**
  30 step ladders / hour (preparation of the step ladder on the machine)
- **One operator only**
- **Adjustable : programmable riveting points (digital axis)**
- **BOLLHOFF assembly system RIVSET : self-piercing rivets**
- **Reliability of the machine**

STEP LADDER CHARACTERISTICS

	dimensions in mm
Number of steps (max)	9
Number of steps (min)	3
Step ladder length (max)	2 000
Angle *a*	To be defined at order
Stile section (standard)	45 x 20 x 1,5
Stile section (mini)	35 x 20 x 0,9
Step thickness	1,2 to 1,5
Steps on stile assembly	4 rivets ø5
Assembly pullout needed strength	1 ton
Assembly cutting needed strength	1 ton

MACHINE FUNCTIONS

Manual

- Loading of the stiles
- Pre-assembly of the step ladder
- Unloading assembled step ladder

Automatic

- Automatic advance guided by digital axis
- Assembly of the product : riveting

Automation PLC : SCHNEIDER PacDrive new generation + HMI 10 ''

Machine for the automatic preparation of scaffolding tubes

The purpose of the machine is to perform an automatic assembly of scaffolding tubes, with operations of cropping, notching, punching, drilling and crimping.
It prepares the tubes and performs the insertion of the aluminum hooks in the tubes. The assembly is then perform by crimping the tube on the hook.
This machine enables to work in cadence for medium and high series of production, with one operator only.

Hooks in aluminium assembled in the tube

Example of scaffolding (Altrex)

Functions of the machine

- Cut at length of tubes (up to ø 50 mm)
- Monitoring of tube wastes
- Orientation of tubes according to the stripes (grooves)
- Punching, drilling
- Notching of the extremities of tubes for welding connection
- Insertion of hooks
- Crimping of hooks in the tubes by specific Guillemin method, in order to obtain a connection which is strong and aesthetic
- Evacuation and storage in carriers

Manual workstation of assembly of tubes in connection rings

This machine performs the expansion of scaffolding tubes in the rings used to connect horizontal and vertical tubes. The process enables to create a strong and resilient connection. It is performed by an expansion gun which is introduced in tubes with big length.
The operator manually loads the tube and the ring.
User friendly machine, for high quality production, for small and medium series.

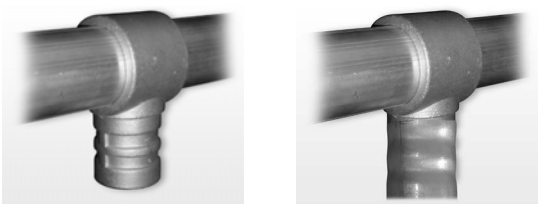

Rings before and after assembly

Example of scaffolding assembly (Ascend)

Implantation des machines

Italie, Allemagne, Angleterre, Russie, Mexique, Indonésie, Turquie, Emirats Arabes Unis, République Tchèque, ...

GUILLEMIN

7 rue de Romelet
21600 LONGVIC - FRANCE

+ 33(0) 380 651 441

+ 33(0) 380 665 903

sales@guillemin.net

www.guillemin.net